Optical Access Network Design with Survivability: Formulation and Efficient Heuristic Algorithm

Soon-Ho Lee
Graduate School of Management, KAIST, iskra@kgsm.kaist.ac.kr

Dong-Wan Tcha
Graduate School of Management, KAIST, tchadw@kgsm.kaist.ac.kr

Moon-Gil Yoon
Business Administration, Hankuk Aviation University, mgyoon@mail.hangkong.ac.kr

Abstract

Optical Access Networks are beginning to be deployed at the edge of the optical backbone network to support broadband user demands. In particular, high volumes of critical traffic in optical access networks need the level of reliability and robustness, which must be considered in the access networks. This paper deals with a survivable network design problem for centralized network with hierarchical architecture: hub network for upper level and access network for lower level. The problem is formulated as Mixed Integer Programming problem embedding a multi-commodity flow model. We have considered the survivability constraints on hub level network, and formulated the problem as classical network design model by introducing dummy nodes and arcs. Admitting the computational complexity of the presented model, we, instead of presenting an exact solution method, develop a heuristic algorithm, which provides a near optimal solution. Our simulation results show that the heuristic algorithm is an effective way to solve the computationally complex problem.

Keywords: Optical Access Network, FTTC, Hub Network, Access Network, Mixed Integer Programming.

1. Introduction

The current explosive growth of communication traffic volume and the user demand for higher data rates are expected to continue in the future [4]. Optical communication network has kept with the growing traffic volume and user demand by exploiting the wavelength division multiplexing (WDM) technology in a backbone network. Also, optical access networks are beginning to be deployed at the edge of the optical backbone network to support broadband user demands. In particular, high volumes of critical traffic in optical access networks need the level of reliability and robustness, which must be considered in the access networks. The major issue of network design problem with survivability is how to build cost-effective network that

is immune to unusual but catastrophic link failure. This paper deals with a survivable network design problem for centralized network with hierarchical architecture: hub network for upper level and access network for lower level.

In the centralized network with hub facilities, each user node should be connected to the CO or the hub through its own cable route, and each hub should be connected to the CO. This logical star-star topology has been introduced and recommended as an efficient one in designing optical access networks based on FTTC (Fiber To The Curb). Despite of the logical topology of centralized networks, most existing physical networks have a tree structure. Figure 1 illustrates the physical topology implementing logical connections for centralized network with hub facilities.

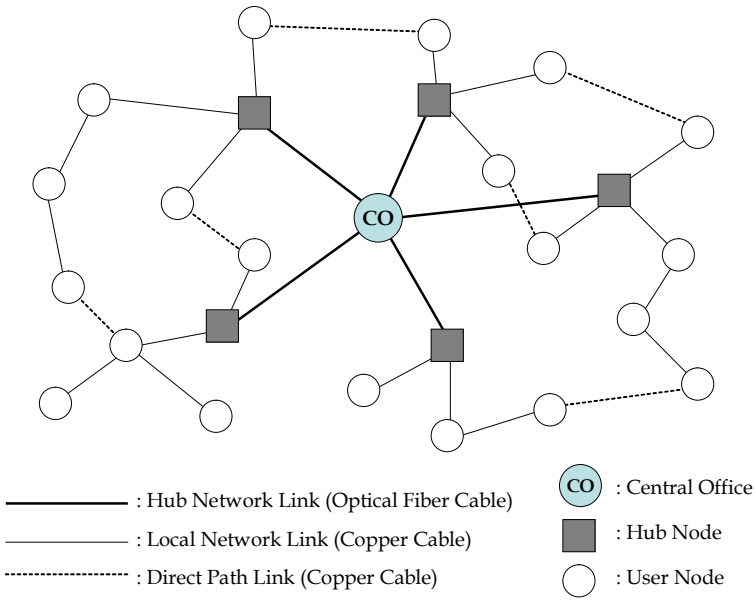

Figure 1. Example of fiber optic LATN – Physical configuration

However, in the tree structure, only a single link failure such as cable cut can lead to a severe service loss in the network. Therefore, a communication network should be designed in such a way that the recovery from link failures is possible by rerouting the service traffic against the damages. This requires an extra connectivity on the network which leads us to the concept of network survivability. Even though there are a variant of network survivability methods, the most common means for a centralized network is to make link diverse path between each customer node and CO, which provide for protection against any single link failure. Figure 2 shows the instance that the survivability constraints are applied to the hub network on Figure 1.

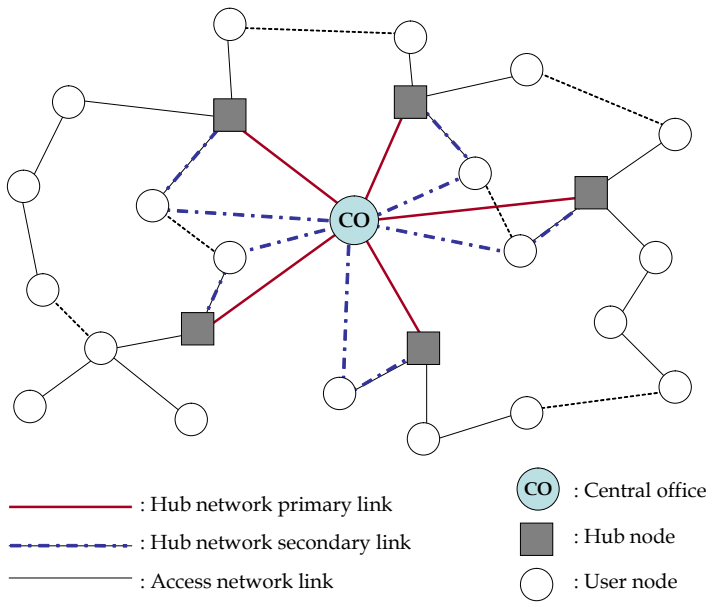

Figure 2. Example of fiber optic LATN with the survivability constraints

Owing to the difficulty of solving the problem, in contrast to the host of existing network design studies, only a few ones on the survivable issue have been reported in the literature. Worth noting are the following few studies [3, 6, 7]. Acknowledging the computational complexity of the problem, one may resort to the conventional approach of partitioning the original problem into three subproblems: hub location, physical survivable network design, and cable installation problems. However, it is very desirable to deal with the whole problem without partitioning into subproblems. Some success has been reported in applying this unified approach in the area of two-level hierarchical network design [1]. However, they have only dealt with the logical network design problems without taking into account its physical implementation plan. Recently, Tcha and Yoon have proposed an integrated mathematical programming model for the selection of hub facilities as well as the design of conduits and cable routes in the centralized and the distributed communication networks [6, 8]. Inspired by their success, the unified approach for a survivable two-level centralized network design is attempted again here without any problem decomposition.

Our problem for designing a survival two-level centralized network is now specifically described: (1) Given are the site location of CO, users, candidate hubs, and the existing links and the potential links for conduit placement. Also known is each user's demand, i.e., the number of circuits that have to be installed between each user and CO. (2) We assume there is

no limit on the link capacity and on the number of users that can be homed to a hub. An established hub has to be connected to CO by link diverse path, of which the capacity is also assumed to be large enough to accommodate any number of user demands. (3) A candidate hub site which is not chosen to be established may still serve as a junction node bridging conduits, thereby significantly increasing the model flexibility. Such nodes then do not incur any fixed established cost, and no users are attached to them. (4) Three major cost elements are considered: fixed cost of establishing a hub, fixed cost of placing a cable and/or a conduit, and variable cost of installing cables. (5) Three kinds of decisions have to be made to minimize the associated total cost: to determine the potential hubs to be established, to find the additional conduits required to provide the survivability of hub network, and to obtain a cable installation plan reflecting survivability in the network.

The rest of this paper is organized as follows: The next section presents a mixed integer programming model, providing with necessary explanations. Section 3 describes a heuristic solution procedure. Section 4 evaluates its performance under various network topologies and demand patterns. Finally in the last section, concluding remarks and suggestions for future work are given.

2. Design Model

The problem of a survivable two-level centralized network design can be formulated as a variant of multicommodity flow problem. Consider a network with a set of nodes N_O, and a set of undirected arcs E_O representing all existing and potential links. The node set N_O consists of three sub sets: The root node 1 is the *CO*, I and J represent the sets of user and hub nodes respectively. We define the set of directed arcs A_O by associating each undirected arc in E_O with two directed arcs having the opposite directions but with the same arc costs. In order to discriminate arc types, the undirected and directed arcs are represented as $\{i, j\}$ and (i, j) respectively.

Let commodity k denote the flow which is originated from node k and destined to the root node. $o(k)$ and $d(k)$ correspond to the origin and the destination nodes of commodity k respectively. The whole commodity is then defined by $K = I \cup J$, and under our commodity definition, $o(k)=k$, $d(k)=1$, $k \in K$. A commodity originated from a node in I is called a user commodity, while those from J hub commodities. γ_k for commodity k is the number of circuits required to communicate between node $o(k)$ and the root node. To make a diverse path, define two types of flow for each hub commodity k on the network: the primary and the secondary flow.

To facilitate the problem formulation, we use the following notations in our mathematical

problem:

- g_j : the fixed cost of establishing a hub facility *j*,
- f_{ij} : the fixed cost of cable installation and/or placing additional conduit on arc {*i*, *j*},
- c_{ij}^{k1} : the variable cost of cable installation on arc (*i*, *j*) along the primary path to meet the demand for commodity *k*, $k \in K$,
- c_{ij}^{k2} : the variable cost of cable installation on arc (*i*, *j*) along the secondary path to meet the demand for commodity *k*, $k \in J$,
- z_{ij} : the 0-1 variable concerning the establishment of arc {*i*, *j*},
- x_{ij}^{k} : the variable denoting the demand fraction of primary flow of commodity *k* transported on arc (*i*, *j*), $k \in K$,
- y_{ij}^{k} : the variable denoting the demand fraction of secondary flow of commodity *k* transported on arc (*i*, *j*), $k \in J$.

As in [12], the hub establishment cost, g_j, $j \in J$, can then be shifted to the cable installation cost on each incident arc for the primary flow, making the network environment where costs are defined only on arcs. Let those costs be redefined as follows:

$$c_{ji}^{k1} \leftarrow c_{ji}^{k1} + g_j \quad \text{for all} \quad k \in J, \; i \in N_O .$$

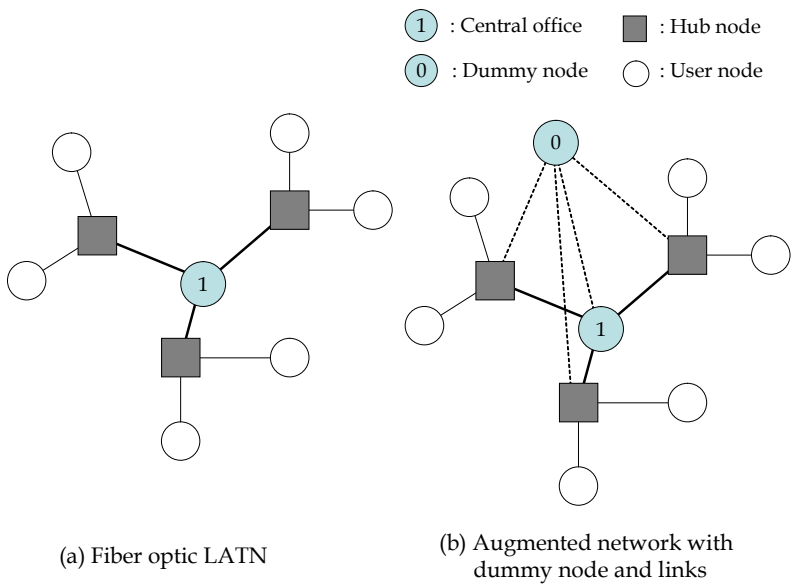

Figure 3. Example of an augmented network

To make our model tractable, we consider an augmented network by introducing a dummy

node and a set of dummy links, which is depicted in Figure 3.

(1) Place an artificial dummy node, denoted by node *0*. Let $N = N_O \cup \{0\}$.

(2) Add the following set of dummy arcs incident to the dummy node: $E_D = \{\{j,0\} \mid j \in J \cup \{1\}\}$. Let $E = E_O \cup E_D$, and A be the set of directed arcs generated from E, as A_O from E_O.

On the dummy arcs, costs are defined as follows:

$$f_{oj} = 0 \text{ for all } j \in J \cup \{1\},$$

$$c_{0j}^{k1} = c_{0j}^{k2} = \begin{cases} 0, & j = 1, k \in K, \\ \infty, & \text{otherwise,} \end{cases}$$

$$c_{j0}^{k1} = c_{j0}^{k2} = \begin{cases} 0, & j \in J, k \in I, \text{ or } j = k, k \in J, \\ \infty, & \text{otherwise.} \end{cases}$$

This network augmentation allows us to use the conventional design approach of meeting network connectivity via multi-commodity network flows. Incorporating all the maneuvers, our complex design problem can be formulated as following mixed 0-1 integer programming problem, which is a variant of classical network design models.

$$(P) \quad \text{Minimize} \quad \sum_{\{i,j\}\in E} f_{ij} z_{ij} + \sum_{k\in K} \sum_{\{i,j\}\in A} c_{ij}^{k1} x_{ij}^k + \sum_{k\in J} \sum_{\{i,j\}\in A} c_{ij}^{k2} y_{ij}^k, \tag{1}$$

subject to

$$\sum_{j\in N} x_{ij}^k - \sum_{j\in N} x_{ji}^k = \begin{cases} 1, & \text{if } i = o(k), \\ -1, & \text{if } i = 1, \\ 0, & \text{otherwise,} \end{cases} \quad \text{for all } i \in N, k \in K, \tag{2}$$

$$\sum_{j\in N} y_{ij}^k - \sum_{j\in N} y_{ji}^k = \begin{cases} 1, & \text{if } i = o(k), \\ -1, & \text{if } i = 1, \\ 0, & \text{otherwise,} \end{cases} \quad \text{for all } i \in N, k \in J, \tag{3}$$

$$x_{ij}^k + y_{ij}^k \le z_{ij} \text{ and } x_{ij}^k + y_{ij}^k \le z_{ij} \quad \text{for all } \{i,j\} \in E_O, k \in J, \tag{4}$$

$$x_{ij}^k \le z_{ij} \text{ and } x_{ji}^k \le z_{ij} \quad \text{for all } \{i,j\} \in E_O, k \in I, \tag{5}$$

$$x_{ij}^{k'} + x_{ij}^k \le z_{ij} \text{ and } x_{ij}^k \le z_{ij}$$
$$\text{for all } \{i,j\} \in E_D, k' \in I, k \in J, o(k) = i \tag{6}$$

$$x_{ij}^{k'} + y_{ij}^k \le z_{ij} \text{ and } y_{ij}^k \le z_{ij}$$
$$\text{for all } \{i,j\} \in E_D, k' \in I, k \in J, o(k) = i \tag{7}$$

$$x_{ij}^k, x_{ji}^k, y_{ij}^k, y_{ji}^k \ge 0 \text{ and } z_{ij} = 0 \text{ or } 1$$
$$\text{for all } \{i,j\} \in E, k \in K. \tag{8}$$

The objective function (1) has three cost terms: fixed costs for cable installation and/or

placing additional conduits, and variable costs for installing the primary and the secondary cables. Recall that hub establishment costs have been translated into the variable costs for cable installation. The constraints (2) and (3) represent the network flow equations for the primary and the secondary flow respectively, making each node to be connected to the root node. The inequalities (4)-(7) are kinds of forcing constraints that flow in either direction can exist only on established edges. To provide the diverse path, the primary and the secondary flow for each hub commodity k should not exist simultaneously on any arcs except on dummy arcs in the augmented network. Since we have concerned with the survivability for hub node connections, the survivability constraints for each hub commodity can be represented as (4) and (5), which denote also forcing constraints on flow. The inequalities (6) and (7) represent the above-mentioned side constraints relating hub establishment, and the forcing constraints for the primary and the secondary flow on dummy arcs respectively.

3. Solution Method

The problem (P) is a mixed integer linear programming problem, which contains a variant of fixed-charge network design problem. The fixed-charge network design problem has been known to NP-hard. Accepting that the MILP (P) is computationally intractable for large networks, we will instead develop a heuristic solution procedure.

Shortly speaking, our heuristic algorithm is the process to determine the set of hub nodes to open in order to minimize the total cost of network design. In a classical two-level centralized network design problem, there is a tradeoff between fixed cost and variable cost. If there are more hub nodes to open, more fixed costs including hub installation cost are required. Otherwise, more variable costs are needed because more user nodes are directly connected to CO not via hub nodes. First, the initial set of hub nodes to open is determined by applying the shortest path algorithm for each user commodity $i \in I$. Given the set of hub nodes to open, the total cost of network design is calculated. Then, we select the least-utilized one of all candidate hub nodes and recalculated the total cost excluding it. If the new total cost is smaller than the original total cost, the hub node is removed. This process is repeated until all candidate hub nodes are considered.

Now, the solution procedure is specifically described with the notations and terminologies in the area of multicommodity network flow problem. Recall that for a given network $G_O = (N_O, E_O)$, I and J denote the set of user nodes and the set of hub nodes in G_O respectively. Also, in order to select the least utilized one of all candidate hub nodes to open in the node exclusion process, we define the utility measure ρ_j of hub node j. The total cost of network design, which includes both fixed and variable costs, is denoted as $TC(H)$ where H is the set of hub

nodes to open.

The initialization of the set of hub nodes to open is first described. The initial set of hub nodes to open, denoted as J^*, is determined by applying a shortest path algorithm to each user commodity $i \in I$. J^* is initialized with null, i.e., $J^* = \phi$. We simply find the shortest path P_i from $o(i)$ to $d(i)$ for each user commodity $i \in I$. For each node $j \in P_i$, check whether the node is a hub node or not. If j is a hub node, j is included in J^* and ρ_j is incremented. Given the set of hub nodes to open, we can calculate the total cost of network design, in which fixed costs for hub establishment, variable costs for primary and secondary link installation in hub nodes, and variable costs for link installation in user nodes. In order to find the primary and secondary path for each hub node, Suurballe's method is used with some modifications [6].

Once the set of hub nodes to open is determined on the given network, we go over to the node exclusion process. Given the set of hub nodes to open, the selection of a hub node to exclude is done by the utility measure ρ_j, $j \in J^*$. The least-utilized hub node j^* with the smallest ρ_j is then removed and the total cost is recalculated. If the new total cost $TC(J^* \setminus \{j^*\})$ is smaller than the original total cost $TC(J^*)$, the node j^* is excluded from the set of hub nodes to open. Otherwise, this hub candidate hub node is then enlisted in the set J^+ of hub nodes to open, and be removed from J^*. We repeat this iteration until $J^* = \phi$, i.e., there exists no more candidate hub node to open to consider.

Algorithm for Survival two-level centralized network design

begin

/* Find an initial feasible solution */

set $J^* = \phi$;

for each user commodity $i \in I$ **do**

find the shortest path P_i from $o(i)$ to $d(i)$;

for each node $j \in P_i$ **do**

if $j \in J$ **then**

increment the utility ρ_j and update $J^* = J^* \cup \{j\}$;

end;

end;

calculate the total cost $TC(J^*)$ including hub establishment cost, fixed costs, and variable costs for cable installation;

/* Exclude the unnecessary hub nodes */

set $J^+ = \phi$;

while J^* is not empty **do**

select the node $j^* \in J^*$ with the minimum utility;

update $\bar{J} = J^* \setminus \{j^*\}$ and calculate the total cost $TC(\bar{J})$;

```
        if TC(J̄) < TC(J*) then
            update J+ = J+ ∪ {j*};
        update J* = J* \ {j*};
    end;
end.
```

4. Computational Results

The proposed heuristic algorithm was implemented with C program language, and a series of computational experiments were performed on a desktop PC (Pentium III/866MHz) to evaluate its efficiency. The main components of the program are the following two subroutines: an initial primal construction and a node exclusion process based on drop-type heuristic. To evaluate the quality of heuristic solutions, we tried to find optimal solutions of (P) by applying CPLEX program [4].

The test problems were generated randomly, but systematically, to obtain problems with differing levels of cost tradeoffs. We first randomly located the pre-specified number of candidate hub and user nodes on a (100x100) grid in the plane. These randomly selected nodes were connected by a randomly generated spanning tree. Additional edges were added randomly until the pre-specified number of edges was obtained. During this process, we made certain that each user node was connected to at least one hub node with an arc and each hub node was connected to CO via two disjoint paths. This was done to guarantee that a feasible solution existed. To define various cost data, we first set a base cost c_{ij} on each arc {*i*, *j*}, which was the Euclidean distance between nodes *i* and *j* on the above plane. The fixed cost of arc {*i*, *j*} was obtained by multiplying the base cost by the scaling factor *f* which was the same for all arcs in a particular network. The variable cost of each commodity *k* on arc (*i*, *j*) was then obtained by multiplying the base cost c_{ij} by the demand γ_k. Each demand γ_k, $k \in K$ was randomly selected from an interval (5.0, 20.0). The hub establishment costs g_i were chosen randomly from an interval (*a*, *b*).

We solved a total of 54 test problems. As shown in Table 1, the problems are divided into two different groups based on problem size, i.e., the number of user and hub nodes, and arcs. Each group is divided into 3 subsets based on the range of hub establishment cost interval (*a*, *b*) and further split into three smaller subsets having different scaling factor *f*. Three randomly generated problems were tested for each subset. The details of the associated computational results for randomly generated problems are summarized on Table 1.

In networks where the variable costs on the arcs are relatively low, the resulting network topology resembles a tree configuration. On the other hand, for higher variable costs on the arcs, the solutions are networks with a mesh topology with more hub nodes to open. As one would

expect, the number of direct, or non-hub, connections increase as the hub establishment costs increase.

Table 1. Computational comparison between optimal and heuristic solutions

Problem	Network Size			Objective Value			Computational Time (Sec.)	
	$(\|I\|,\|J\|,\|E\|)$*	Hub Cost	F/C#	Optimum Solution	Heuristic Solution	Difference+ (%Gap)	Optimum Solution	Heuristic Solution
I-1	(10,5,80)	1,000	50	18,348	19,419	5.8	24	0.1
I-2		~	100	28,254	31,489	11.4	141	0.2
I-3		3,000	300	98,775	111,619	13.0	843	0.1
I-4		5,000	50	20,194	23,156	14.6	2	0.2
I-5		~	100	25,673	31,833	23.9	29	0.1
I-6		8,000	300	98,484	112,767	14.5	297	0.1
I-7		10,000	50	17,304	19,602	13.2	10	0.3
I-8		~	100	26,382	30,329	14.9	8	0.1
I-9		20,000	300	89,170	103,165	15.6	181	0.1
II-1	(15,5,120)	1,000	50	32,112	34,190	6.4	301	0.1
II-2		~	100	56,973	61,500	7.9	1146	0.2
II-3		3,000	300	109,269	128,450	17.5	2413	0.1
II-4		5,000	50	24,135	26,774	10.9	7	0.3
II-5		~	100	41,847	46,059	10.0	9	0.3
II-6		8,000	300	116,450	136,340	17.0	1080	0.1
II-7		10,000	50	25,500	29,808	16.8	16	0.2
II-8		~	100	45,471	51,311	12.8	181	0.1
II-9		20,000	300	107,711	125,781	16.7	604	0.3

*: $(|I|,|J|,|E|)$ represent the number of the users, the candidate hubs, and the edges.

#: The ratio of the basic cost of a fixed cost for the base cost of a variable cost.

+: %Gap = (heuristic solution – optimum solution)/(optimum solution) * 100.

We attempted to solve more test problems optimally by using CPLEX, but we could not get the optimal solutions within 24 hour of computation time for the large size networks. Table 1 shows the comparison between the heuristic and the optimal solutions for the small size networks. From Table 1, one can see that the objective values of heuristic solutions are almost the same as those of the optimal solutions. However, the computation time required to get the heuristic solutions is considerably less. Although the comparison is performed on small size network, the computational results indicate that our heuristic generates good feasible solutions in reasonable time.

Finally, the gaps between the objective value for heuristic solution and the objective value for the optimal solution increase as the problem size and/or the arc fixed costs increase, and tend to decrease as the hub fixed costs g_i increase. Given that hub fixed costs are relatively

large in many real-world optical access networks, our computational experience suggests that the heuristic solution procedure proposed in the paper will yield good solutions for such problems.

5. Conclusions

This study has dealt with a survivable network design problem for centralized network with hierarchical structure. A mixed 0-1 programming model was first presented as a variant of classical network design model by introducing dummy nodes and arcs. Owing to the associated computational complexity, we developed an efficient heuristic algorithm by exploiting the special structure of design models. Our heuristic algorithm was investigated on 54 randomly generated networks of varying sizes and cost structures. The results indicate that the approach compares favorably in terms of computation time and solution quality to previously reported results for hub network design problems. Further, some extensions and variants of these models and solution methods merit investigation for more practical implementations.

References

[1] S. H. Chung, Y. S. Myung, and D. W. Tcha, "Optimal Design of a Distributed Network with a Two-level Hierarchical Structure," *European Journal of Operational Research*, Vol. 62, No. 1, 1992.

[2] CPLEX Optimization 6.5, ILOG Inc. 2001.

[3] B. Gavish, P. Trudeau, M. Dror, M. Gendreau, and L. Mason, "Fiberoptic circuit network design under reliability constraints," *IEEE Journal on Selected Areas in Communications*, Vol. 7, Oct. 1989.

[5] Mark Kuznetsov, Nan M. Froberg, Scott R. Henion, and Hemonth G. Rao, "A Next-Generation Optical Regional Access Network," *IEEE Communications Magazine*, Jan. 2000.

[6] Suurballe, T. and R. Tarjan, "A quick method of finding shortest pairs of disjoint paths," *Networks*, Vol. 14, 1985.

[7] D. W. Tcha and M. G. Yoon, "Conduit and Cable Installation for a Centralized Network with Logical Star-Star Topology," *IEEE Transactions on Communications*, Vol. 43, No. 2, Feb. 1995.

[8] T. H. Wu, D. J. Kolar, and R. H. Cardwell, "Survivable Network Architectures for Broadband Fiber Optic Networks: Model and Performance Comparison," *IEEE Journal of Lightwave Technology*, Vol. 6, Nov. 1988.

[9] M. G. Yoon, Y. H. Baek, and D. W. Tcha, "Distributed Fiber Transport Network Design Problem," *European Journal of Operational Research*, Vol. 104, No. 3, 1998.