ASSESSING BOND RATINGS USING AN ARTIFICIAL INTELLIGENCE TECHNIQUE

Kee S. Kim

Southwest Missouri State University, Finance Department
901 S. National Ave, Springfield, MO 65804, U. S. A.
Phone: 417-836-6345; FAX: 417-836-6224
Email: ksk882f@smsu.edu

Topic area: Finance/Financial Management

ASSESSING BOND RATINGS USING AN ARTIFICIAL INTELLIGENCE TECHNIQUE

ABSTRACT

This paper developed a model to examine if bond ratings could be assessed using financial and non-financial variables although the rating agencies have asserted that researchers would not be able to replicate their ratings quantitatively. The model used an artificial intelligence (AI) technique that is non-parametric and designed to capture a dynamic relationship between input and output variables. The results showed that bond rating could be assessed quite accurately and critical variables were successfully identified.

INTRODUCTION

Bond ratings reflect a firm's financial and business risks, and hence represent its default risk. The expected yield on a bond is determined primarily by the default risk of firms. When lending institutions, for example, evaluate loan applications, they first look at bond ratings that indicate financial condition of the borrowing institutions, and then determine the yields commensurate with the default risk of bonds. When lending institutions provide financial consulting and advices to companies on borrowing, they rate the corporation into an equivalent risk class to help negotiate and determine an appropriate yield of the loan.

Publicly traded bonds are rated by two respected agencies: Standard & Poor's (S&P) and Moody's Corporations. These two rating agencies claim that their ratings reflect each agency's opinion about an issue's potential default risk and rely heavily on a committee's analysis of the issuer's ability and willingness to repay both the principal and its interest on the loan while staying within the protective provisions for the issue.

These rating agencies assert that researchers would not be able to replicate their ratings quantitatively because these ratings are subjective and qualitative. However, many researchers believe that both financial and non-financial data can be used to replicate their bond ratings.

The credit rating of the firm depends entirely on the possibility that the promised interest and principals will not be paid on time due to financial difficulties. The patterns of financial and non-financial data of corporations in each category of bond ratings should have some commonality, although they can vary depending on the size of the firm and the industry to which the company belongs. Gibson and Frishkoff (1986) acknowledged that the pattern of the financial ratios of the firms in one industry could be very different from those in another industry. Financial data of a firm tend to have multi-colinearity among them and their pattern in each category of bond ratings could also vary significantly depending on accounting practice of the firm involved. Consequently, it has known to be very difficult to identify objectively the pattern of the individual credit rating categories with financial and other non-financial data alone.

Although rating agencies have been maintaining the position that statistical methods cannot replicate their ratings, several studies have proved that statistical methods can duplicate these ratings. (James S. Ang and Kiritkumar, 1975; Bhandari,Soldosky and Boe, 1979). Most of these studies use statistical models constructed from historically based financial ratios and employ the use of discriminant, regression and factor analyses. Lloyd McAdams (1980) employs the use of multiple discriminant analysis to design a statistical credit analysis model to assist portfolio managers to predict agency downgrades of electric utility bonds. Horrigan (1966) and Pogue & Soldofsky (1966)

models use regression to predict Moody's findings. Pinches and Mingo (1973) use factor analysis to screen variables for predicting bond ratings and then apply multiple discriminant analysis. Kamstra, Kennedy and Suan (2001) improve the statistical predictive model by combining several forecasting methods to predict bond ratings in the transportation and industrial sectors. They use ordered logit method to combine forecasts and they find that combined forecasts outperform their input forecasts.

The purpose of this research is to identify bond ratings in terms of a set of publicly available data via an artificial intelligence approach, Adaptive Learning Networks (ALN). Our main concern is to examine whether an ALN technique can be used to overcome the difficulties associated with assessing the credit standing (ratings) of the firms using publicly available data. An ALN model is known to be better than other statistical models because the ALN model is able to learn and generalize the knowledge obtained from the correlations between the input and output, which are frequently nonlinear, incomplete and/or unclear. When the data are discontinuous or non-linearly separable, the innate representation become inconsistent, and therefore the mapping cannot be learned by multi-variate statistical techniques. Since the ALN model is non-parametric by nature and it can also ignore undesirable noise in the input data, it should be able to identify more accurately the credit rating of the firm whose data are frequently inconsistent, non-parametric, and have multicollinearity.

THE ADAPTIVE LEARNING NETWORK

The Adaptive Learning Networks (ALN) technique (R. L. Barron, Mucciardi, Cook, Craig, and A.R. Barron, 1984) was developed from almost three decades of statistical modeling, neural network, and artificial intelligence research. The ALN technique automatically generates the trained network from the database and performs a traditional task of fitting model coefficients to bases of observational data. It uses a network structure that resembles neurons and synapses of a human brain and also uses mathematical functions that represent numeric knowledge on each processing unit. The power of the network lies in its ability to decompose complex problems into much smaller and simpler ones, and to solve them. The network structure makes decision-making much easier because the numbers of factors to consider and the alternatives to evaluate become smaller.

Montgomery (1989) developed an effective computer-based algorithm called the Abductory Induction Mechanism (AIM), from which MarketMiner Inc. (formerly AbTech Corp.) developed ModelQuest™. ModelQuest™ is designed to inductively create adaptive networks as models. It is a supervised inductive learning tool for automatically synthesizing models in the form of networks from a database of input and output variables. It was developed based on Abductive reasoning, that is, a "process of reasoning from a set of general principles to specifics *under uncertainty* using numeric functions and measures," (Montgomery, 1989) and machine-learning techniques called Abductive Modeling.

The adaptive model obtained from the AIM synthesis process is a layered network of feed-forward functional elements (nodes), in which the coefficients, number and types of network elements, and the connectivity are learned inductively and automatically. Each processing unit (node) has a unique equation of multi-variable configurations: singles, doubles, triples, normalizers, white elements, unitizers, and wire elements (Montgomery, 1989). Normalizers transform the original input variables into standardized normal variables with a mean of zero and a variance of one. The white element is a linear combination of all inputs to the current layer. Unitizers convert the normalized data back into the original data to assess the output values. The algebraic form of singles, doubles, and triples is shown in the following equations:

$$\text{Single} = W_0 + W_1*X_1 + W_2*X_1^2 + W_3*X_1^3$$

$$\text{Double} = W_0 + W_1*X_1 + W_2*X_2 + W_3*X_1^2 + W_4*X_2^2 + W_5*X_1*X_2 + W_6*X_1^3 + W_7*X_2^3$$

$$\text{Triple} = W_0 + W_1*X_1 + W_2*X_2 + W_3*X_3 + W_4*X_1^2 + W_5*X_2^2 + W_6*X_3^2 + W_7*X_1*X_2 + W_8*X_1*X_3 + W_9*X_2*X_3 + W_{10}*X_1*X_2*X_3 + W_{11}*X_1^3 + W_{12}*X_2^3 + W_{13}*X_3^3$$

Where X_i and W_i denote input variables and coefficients respectively. These elements are homogeneous multinomials of degree 3 in one, two, three variables and allow interaction among input variables. It is well known that a suitably high degree multinomial---a polynomial of n variables in which all cross products appear and combinations of the variables to a different degree are included---can approximate arbitrary functions of many variables very accurately (Barron et al., 1984). All these terms in the equation may not always appear in a node since ModelQuest™ will throw out the terms that do not contribute significantly to output. The output of elements in one

layer will then feed into subsequent layers, together with the original input variables. Networks are synthesized from layer to layer until the adaptive network model ceases to improve based on Predicted Squared Error (PSE) criterion.

The objective of the ALN algorithm is to train and identify the model that minimizes the predicted squared error (PSE), the errors on as yet unforeseen data, without over fitting the data (A.R. Barron, 1984). PSE consists of the training squared error (TSE) and overfit penalty as shown in the following:

$$PSE = TSE + 2\sigma_p^2 \frac{K}{N}$$

Where TSE is the average squared error of the model on the training sample observations, K is the number of coefficients that are estimated to minimize TSE, σ_p^2 is the prior estimate of true error variance, and N is the size of the training sample observation. The minimum PSE is always attainable because as each coefficient is added to the model, TSE decreases at a decreasing rate while the overfit penalty increases linearly. If the adaptive model is obtained by minimizing TSE alone, the model will perform well on the training data set, but it can perform poorly on evaluation samples. When the model has an overly complex structure and many coefficients, it will give a poor estimate of error on the test data set. By adding a term for overfit penalty, the minimum expected squared difference between the estimated model and the true model on the future data set can be obtained (A.R. Barron, 1984).

ModelQuest™ (2000) integrates advanced data modeling algorithms such as StarNet™ with more traditional data analysis technologies in a very easy-to-use and

powerful data mining technology. An application of ModelQuest™ entails the following four steps as shown in Figure 1.

(Insert Figure 1 here)

The first step involves identifying and characterizing data for a better solution. The second step involves representing and transforming the data through mapping, sampling, and feature extraction routines to provide additional inputs and to compensate for outliers and sparse regions. The third step is to split data into training and evaluation subsets, and train a model from a training data set. The ModelQuest™ automatically synthesizes the optimal ALN network including model size, connectivity, and parameter values. The last step involves applying the model to an evaluation data set and predicting output values. The accuracy and consistency of prediction determines how well the model works.

MODEL DEVELOPMENT

Default risk reflects the issuer's financial condition and contractual provisions of the bond. Although the evaluating procedures of rating agencies seemingly are not dependent on financial analysis alone, it can be conjectured that financial strengths-weakness, other non-financial data such as size and industry classification and other qualitative factors are taken into consideration directly and indirectly in the process. The primary financial variables are cash flow, profitability, liquidity, leverage, asset management, and market ratios and non-financial data include size and industry variables among other things. Qualitative factors used by these agencies include management ability, value of intangible assets, financial flexibility, operating efficiency, industry risk, accounting quality and market position. However, these qualitative factors could be

reflected in the quantifiable data including financial and other non-financial variables under normal circumstance.

The model is structured as a function of 26 financial and other non-financial variables. The input variables include both stock- and flow-variables that represent cash reserves, leverage, liquidity, profitability, and market value ratios (Appendix A). In addition, expected values and standard deviation of key earnings and financial leverage variables are also included initially as input variables. The output variable is S&P bond rating which represents 23 different bond ratings, including AAA^+, AAA, AAA^- , AA^+, AA, AA^-,…, CC^+. However, since not all individual bond classes have enough sample, the rating were coded on four different level such a way that the output coding is 1 if the rating is higher than A^+, 2 if it is higher than BB^+, 3 if it is higher than CCC^+, and 4 for the rest of ratings (Appendix B). The investment grade bond is classified into the first two levels while junk bond is classified into the last two levels. In this paper it is examined to see if each bond can be categorized into four levels using financial and non-financial data of the company involved.

These input and output data were collected primarily from the COMPUTSTAT database, Dun & Bradstreet database, and S & P bond manuals. The data set also excluded utilities, transportation, and financial companies because their financial structures are quite different from the rest of companies. Next, the sample was divided randomly into one (75 %) for training and another (25%) for testing the model. A larger sample size is used for training because an accurate training normally requires a larger sample by nature.

EMPIRICAL RESULTS AND IMPLICATIONS

A final Adaptive Learning Network (ALN) is synthesized in Figure 2 from training, using the ModelQuest™ that is developed by MarketMiner (formerly AbTech), Inc. It is a layered network of feed-forward functional elements, which contain the best network structure, node types, coefficients, and connectivity to minimize the predicted squared error (PSE). The model used nine different input variables with a repeat of ROA and LNTA to synthesize the final ALN model. None of the statistical variables such as standard deviation and expected variables was selected for predicting bond ratings. **(Insert Figure 2 here)**

The equations in Appendix C show the final ALN model in polynomial equation forms, and each equation number represents the node number of the ALN network as shown in Figure 2. The nine input variables were first transformed into standardized normal variables with the mean of zero and a variance of one using normalizers in the Appendix C. These standardized variables were next fed into the first layer to generate a series of intermediate output values. For example, the node Triplet 20 (T20) was synthesized using normalized values of return on total assets (ROA), natural log of total assets (LNTA), long-term debt to total assets (LDTA) ratio, and then fed into the node T35 with two other inputs: T21 and Operating Margin after Depreciation (OMAD). The value of the node T35 with two other variables, EICBT and CCL are fed again into the subsequent node T46 in the third layer, and finally T53 in the fourth layer is synthesized with two other variables, Fixed Asset Turnover (FAT) and Current Ratio (CR). These values are again converted back to bond ratings with the mean and variance of the original output variables. This network is the final ALN model that becomes a

knowledge base from which bond ratings could be assessed using the eight different input variables when this final model is validated.

The assessment results of the ALN on the evaluation sample are shown in Figure 3. The overall performance of the model shows that the trained ALN model was successful in assessing two hundred twenty eight observations correctly (84%) out of 272 cases. The ALN model evaluated 8 cases correctly out of 14 companies in the best rating group while 6 cases was categorized in the second group. The valuation accuracy on the level 2 and 3 are 88% and 91% respectively and shows convincingly that it is possible to evaluate bond ratings quite correctly using financial ratios alone without referring to the opinion of the two rating companies. The assessment result of companies in the lowest rating group seems to indicate that the companies in the rating level 4 might not be distinguishable from those in the level 3.

(Insert Figure 3 here)

In Figure 4, the variable sensitivity and importance of the ALN model is shown. The sensitivity value indicates the relative response of the model output to the changes in each input value with all other variables being constant. The sensitivity value of LNTA is dominant in the sense that over 80 percent of bond rating changes are determined by Total Asset size alone. The result indicates that the size of the Total Asset (LNTA) is dominating all other input variables in it influence on the bond rating. The next dominant variables are CR and ROA although their influences on the bond ratings are very limited.

The Importance value indicates the expected overall contribution of each input variable to the predicted bond rating changes, which is standardized by the total output changes possible. For example, Figure 4 indicates that over 82 percent of bond rating

changes are caused by changes in total assets (natural log of TA) at a point of the average TA values. The Importance value of LNTA also indicates that about 82 percent of total possible rating variations are caused by changes in the size of Total Assets (LNTA) while only 8 and 6 percent of rating changes are attributable to changes in current ratio (CR) and ROA respectively. The important implication of the above results is that bond rating changes are primarily determined by the company's Total Asset size while the liquidity and profitability of the company are also important in bond rating determination.

(Insert Figure 4 here)

CONCLUDING REMARKS

This study has shown that bond ratings could be assessed using financial data without referring to the expertise of the two major rating agencies. Furthermore, it has identified critical variables that determine bond ratings. Among them the Total Asset size of the company was the primary determinant. The variation of bond rating was also attributable to the current ratio and ROA among other variables although their influences are quite limited. One important strategic implication of this study is that companies should increase their total assets if they want to improve their bond ratings among others. When companies increase investments on the profitable projects, their ROA will automatically improve together with improvement in the liquidity.

As an extension of the study, it would be worthwhile to examine the prediction outcome of bond rating if this model is trained and tested within the confines of an industry or similar industries. Since individual industries have their own common characteristics in financial structure, we can safely conjecture that the prediction results

would be significantly improved if the sample size is large enough for both training and testing.

REFERENCES

Ang; James S. Kiritkumar A. Patel "Bond Rating Methods: Comparison and Validation," Journal of Finance, 1975, v30 (2),631-640.

Barron, A.R., "Predicted Squared Error: A Criterion for Automatic Model Selection," *Self-Organizing Methods in Modeling*: *GMDH Type Algorithms*, edited by S.J. Farlow, Marcel-Dekker, Inc., New York, 1984.

Barron, R.L., Anthony N. Mucciardi, Francis J. Cook, Joseph N. Craig, and Andrew R. Barron. "Adaptive Learning Networks: Development and Application in the U.S. of Algorithms Related to GMDH," *Self-Organizing Methods in Modeling: GMDH Type Algorithms*, edited by S.J. Farlow, Marcel-Dekker, Inc., New York, 1984.

Barron, M. J., A.D Clare and S.H. Thomas. "The Effect of Bend Rating Changes and New Ratings On UK Stock Returns," Journal of Business Finance and Accounting, 1997, v24 (3/4, Apr), 497-509.

Bhandari, Shyam B., Robert M. Soldofsky and Warren J. Boe. "Bond Quality Rating Changes For Electric Utilities: A Multivariate Analysis," Financial Management, 1979, v8(1), 74~81.

Gibson, C., and P. Frishkoff, Financial Statement Analysis Using Financial Accounting Information, 5th Ed. (Boston: Kent Publishing company, 1986).

Goh, Jeremy.C. and Louis H. Ederington. "Is A Bond Rating Downgrading Bad News, Good News, or No News For Stockholders?," Journal of Finance, 1993, v48(5), 2001-2008.

Grier, Paul and Steven Katz. "The Differential Effects of Bond Rating Changes among industrial And Public Utility Bonds By Maturity," Journal Of Business, 1976, v49(2), 226-239.

Hand, John R. M., Robert W. Holthausen and Richard W. Leftwich. "The Effect of Bond Rating Agency Announcements On Bond and Stock Prices," Journal Of Business, 1992, V47(2),733-752.

Horrigan, James L., "The Determination of Long Term Credit Standing with Financial Ratios," Empirical Research in Accounting: Selected Studies, 1966, Supplement to V.4, Journal of Accounting Rearch.

Impson. C. Michael, lmre Karafiath and John Glascock. "Testing Beta Stationarity Across Bond Rating Changes," Financial Review, 1992, v27(4), 607-618.

Kamstra, M., P. Kennedy, and Tech-Kin Suan. "Combining Bond Rating Forecasts Using Logit," The Financial Review, 37 (2001) 75-96.

Kwon, Young S., Ingoo Han and Change Lee. "Ordinal Pairwise Partitioning (OPP) approach To Neural Networks Training In Bond Rating," International Journal of Intelligent Systems in Accounting, Finance and Management, 1997, v6(1 Mar), 23-40.

Lewis, Barry L., James M. Patton and Sharon L. Green. "The Effects of Information Choice and Information Use On Analysts' Predictions Of Municipal Bond Rating Changes, Accounting Review, 1988, v63(2), 270-282.

Loviscek, Anthony L. and Frederick D. Crowley. "What Is in a Municipal Bond Rating?," Financial Review, 1990, v25(1), 25-54

McAdams, Lloyd. "How to Anticipate Utility Bond Rating Changes," Journal of Portfolio Management, 1980, v7 (1), 56-60

Matolcsy, Z. P. and T. Lianto. "The Incremental Information Content of Bond Rating Revisions: The Australian Evidence," Journal of Banking And Finance, 1995, v19(5}, 891-902.

Melicher, Ronald W. and David F. Rush. "Systematic Risk, Financial Data, and Bond Rating Relationships in a Regulated Industry. Environment," Journal of. Finance, 1974, v29(2), 537-544.

Montgomery, G.J., "Abductive Diagnostics," Proceedings of the AIAA Computers in Aerospace Conference, Monterey, CA, October 1989.

Pinches, George E. and J. Clay Singleton. "The Adjustment of Stock Prices to Bond Rating Changes," Journal of Finance, 1978, v33(1), 29-44

Pinches George E., and Kent A. Mingo, " A Multifariate Analysis of Industrial Bond Ratings," The Journal of Finance, March 1973.

Pogue, Thomas F., Robert M. Soldofsky, " What's a Bond Rating?" Journal of financial and Quantitative Analysis, 4 June, 1969

Thompson G Rodney and Peter Vaz. "Dual Bond Ratings: A Test of The Certification Function of Rating Agencies," Financial Review, 1990, v25(3), 457-472.

Wansley, James W., John L. Glascock and Terence M. Clauretie. "Institutional Bond Pricing and Information Arrival: The Case of Bond Rating Changes," Journal of Business Finance and Accounting, 1992, v19(5), 733-750.

Appendix A: Input Data to the ALN Model

Size:
X_1: Total Assets (dollars) in natural log (TA)

Profitability:
X_{13}: Return on Total Assets (ROA)
X_{14}: Return on Equities(ROE)
X_{15}: Profit Margin (PM)
X_{16}: Operating Margin After Depreciation (OMAD)
X_8: Earning Growth(EG)

Leverage:
X_{10}: LT Debts/Total Assets (LD/TA)
X_{17}: LT Debts/ Total Capitalization (LD/TC)
X_{11}: Loan/Total Assets (L/TA)
X_7: Interest Coverage Before Tax (ICBT)
X_9: Average TIE (AICBT) .
X_{24}: Total Debts/Cash Equivalents (TD/CASH)
X_{21}: Retained Earnings/Total Assets (RE/TA)

Asset Management:
X_{20}: Sales/Accounts Receivables (RTO)
X_6: Sales/Total Cash Reserves (CaTO)
X_{26}: Sales/Fixed Assets (F ATO)
X_{25}: Sales/Total Assets (TATO)

Liquidity:
X_2: Current Ratio (CR)
X_5: Net Working Capital/Sales (NWC/S)
X_4: Net Working Capital/Total Assets (NWC/TA)

Cash:
X_3: Cash Reserves/Current Liabilities (Ca/CL)
X_{22}: Cash Inflows/Inventories (Cin/IV)
X_{23}: Cash Inflows/Total Debts (Cin!TD)

Value:
X_{19}: PricelEarnings Ratio (PE)
X_{18}: Market Value/Long-Term Debts (MV/LTD)
X_{12}: Market Value/Book Value (ME)

Appendix B: Data Descriptions of Bond Ratings

Frequency of Data Bond_Ind

	Original Ratings	Model Ratings	Frequency	Cum
AAA+	2	1	11	11
AA+	4	1	3	14
AA	5	1	13	27
AA-	6	1	22	49
A+	7	2	59	108
A	8	2	85	193
A-	9	2	76	269
BBB+	10	2	108	377
BBB	11	2	121	498
BBB-	12	2	101	599
BB+	13	3	59	658
BB	14	3	94	752
BB-	15	3	88	840
B+	16	3	103	943
B	17	3	60	1003
B-	18	3	41	1044
CCC+	19	4	19	1063
CCC	20	4	11	1074
CCC-	21	4	7	1081
CC+	23	4	10	1091
			1091	

Appendix C: Network Equations for the final ALN Model

APPENDIX: ADAPTIVE NETOWRK EQUATIONS

Normalizers:

ROA $= -.27 + .1116X_1$
LNTA $= -15.2375 + .7007X_1$
LDTA $= -1.4079 + .0419X_1$
LDTC $= -.9538 + .0187X_1$
E_ICBT $= -.2534 + .0349X_1$
C_CL $= -.4963 + .0122X_1$
FAT $= .5232 + .1091X_1$
CHE_TA $= -.5097 + .0071X_1$
LOAN_TA $= -1.4709 + .1201X_1$

Triples:

$$T20 = .0797 + .2968X_1 + .0010X_1^3 + .4618X_2 + .0557X_1X_2 + .0294X_1^2X_2 - .0881X_2^2 - .0712X_1X_2^2 - .4273X_3 - .0503X_2X_3 + .0701X_1X_2X_3 + .0893X_2^2X_3 - .0631X_3^2 - .0143X_1X_3^2 + .0349X_2X_3^2 + .0162X_3^3$$

$$T21 = -.1022 + .1759X_2 + .484X_1X_2 + .0906X_2^2 + .2081X_1X_2^2 + .0213X_2^3 + .4161X_3 + .2395X_1X_3 + .0385X_1^2X_3 + .8119X_2X_3 + 1.0632X_1X_2X_3 + .173X_2^2X_3 - .0687X_3^2 - .0534X_3^2 - .1411X_2X_3^2 + 2.0E-4X_3^3$$

$$T35 = .0511 + 1.2712X_1 - .1471X_1^2 - .3168X_1^3 + .4655X_2 - .0831X_1^2X_2 - .1058X_2^2 + .0053X_2^3 - .2395X_3 + .0614X_1X_3 + .0786X_1^2X_3 - .4029X_2X_3 + .239X_1X_2X_3 + .0413X_2^2X_3 - .0083X_1X_3^2 + .0521X_2X_3^2 + .0020X_3^3$$

$$T46 = 1.2755X_1 - .0481X_1^2 - .296X_1^3 - .1525X_2 - .0106X_1X_2^2 + .0020X_2^3 + .1977X_3 - .0882X_1^2X_3 - .2276X_2X_3 - .0772X_1X_2X_3 + .0097X_2^2X_3 - .0311X_3^2 - .0273X_2X_3^2$$

$$T53 = 1.305X_1 - .3048X_1^3 - .1416X_2 + .208X_1^2X_2 - .1483X_1X_2^2 + .0464X_2^3 + .1391X_3 - .0398X_1X_3 - .0806X_1^2X_3 + .0365X_2X_3 - .0344X_2^2X_3 - .0262X_3^2 + .0026X_3^3$$

Unitizers:

$$R3 = .5575 + .497X_1$$

FIGURE 1. ModelQuest™ Modeling Procedure

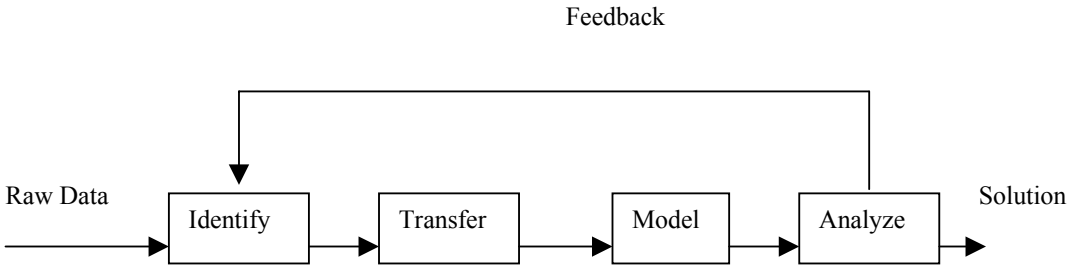

FIGURE 2: Adaptive Learning Network Model

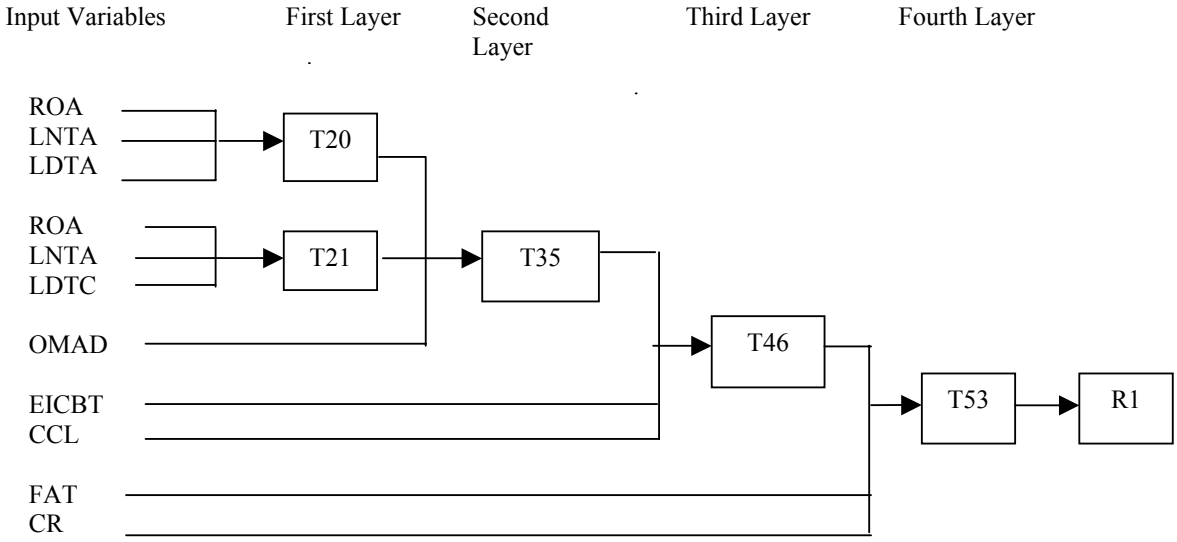

FIGURE 3. Contingency Table for the Prediction Results

Predicted	**1**	**2**	**3**	**4**	**Total**
Actual					
1	8	6	0	0	14
2	1	113	14	0	128
3	1	7	107	3	118
4	1	1	10	0	12
Total	11	127	131	3	272

Figure 4. Variable Sensitivity and Importance

Input Description	Sensitivity	Importance
LNTA	0.8030	0.8197
CR	0.0782	0.0125
ROA	0.0606	0.0469
LDTA	0.0297	0.0532
FAT	0.0105	0.0101
OMAD	0.0096	0.0187
EICBT	0.0037	0.0109
LDTC	0.0024	0.0098
CCL	0.0023	0.0182