Collaborative vendor-buyer model with stochastic demand

P. C. Yang[1], L. Y. Leu[1], S. Pai[2], H. M. Wee[3],

[1] Industrial Engineering and Management Department, St. John's University, Tamsui, Taipei 25135, Taiwan
E-mail: pcyang@mail.sju.edu.tw
[2]Marketing and Logistics Department, St. John's University, Tamsui, Taipei 25135, Taiwan
[3] Industrial and Systems Engineering Department, Chung Yuan Christian University, Chungli 32023, Taiwan

Abstract.

This study develops a collaborative vendor-buyer model with stochastic demand. An optimal replenishing and pricing policy for each of the three scenarios is derived. The first scenario does not consider collaboration and price discount. The second scenario considers collaboration without price discount. The last scenario considers both the collaboration and price discount. Since it usually benefits the vendor more than the buyer when the buyer and the vendor collaborate, a quantity discount pricing strategy is necessary to entice the buyer to accept the collaboration. A negotiation factor is incorporated to balance the profit sharing between both players. In addition, we have proved that the collaborative advantage is usually more significant when the demand mean value decreases or the standard deviation increases. A numerical example and sensitivity analysis are provided to validate the theory.

Keywords: Stochastic demands, collaboration, vendor-buyer model, replenishing and pricing strategy.

1. Introduction

Traditionally, the vendor and the buyer are two individual entities with different objectives and interests. Due to rising cost, globalization, shrinking resources, shortened product life cycles and the importance of quick responsive, increasing attention has been placed on the collaboration of the whole supply chains. An effective supply chain network requires a cooperative relationship between the vendor and the buyer. The cooperation includes the sharing of information, resources and profit. The result of close cooperation is a mutual beneficial environment which will increase the joint profit as well as enable a quicker respond to customer demand. One of the most common strategies is to setup an optimal replenishment and pricing policy acceptable to both the vendor and the buyer. These strategies may also include a better credit terms and price discount policy.

Monahan (1984) was one of the early authors who analyzed a vendor-oriented optimal quantity discount policy that maximized the vendor's gain; it is done at no additional cost to the buyer. Lal and Staelin (1984) developed a fixed order quantity decision model with a discounting scheme to benefit the buyers. Lee and Rosenblatt (1986) generalized Monahan's model and developed an algorithm to solve the vendor's ordering and discount-pricing policy. Gallego and van Ryzin (1994) derived some models to deal with how a buyer decides the price of a product that can be sold only during a single period of time. Kim and Hwang (1988) derived an incremental discount-pricing schedule with multiple customers and single price break. Chakravarty and Martin (1988) developed a joint cost-sharing scheme between the seller and the buyers. An algorithm was developed to determine both the discount price and the replenishment interval for any desired negotiation

factor. Weng and Wong (1993) developed a general all-unit quantity discount models to determine the optimal pricing and replenishment policy. Under the condition of price-sensitive demand, Weng (1995) later considered the vendor's quantity discount from the perspective of reducing the vendor's operating cost and increasing the buyer's demand. Li et al. (1996) developed a lot-for-lot joint pricing policy with price-sensitive demand. Wee (1998) developed a lot-for-lot discount pricing policy for deteriorating items with constant demand rate. Emmons and Gilbert (1988) studied the effect of return policy on both the vendor and the buyer. Such policy is to maximize the vendor's profit by inducing the buyer to place larger order when demand is uncertain. Shin and Benton (2007) developed supply chain coordination using quantity discount.

In this paper, a collaborative supply chain model with price discount is developed for a stochastic demand. A negotiation factor is incorporated to share the profit between both players. Numerical example and sensitivity analysis are carried out to show how the demand's mean and the standard-deviation affect the joint expected profit.

2. Mathematical modeling and analysis

The mathematical model is developed on the basis of the following assumptions.

(a) The demand rate is uncertain with known probability density function

(b) A collaborative system of single-vendor and single-buyer is considered.

(c) The vendor and the buyer have complete knowledge of each other's information.

(d) A fashion product like dress and catalogue product with single order period, short selling season and long production lead-time is considered.

The parameters are as follows:

Q_i Buyer's order quantity for scenario i, i=1, 2, 3

W_i Wholesale price paid by the buyer to the vendor for scenario i

R Retail price

$f(x)$ Probability density function of uncertain demand x

S Unit shortage cost

V Salvage value for each unsold unit

C Vendor's unit variable cost

K Vendor's fixed cost per setup

EP_{bi} Buyer's expected profit for scenario i

EP_{vi} Vendor's expected profit for scenario i

EP_i Joint expected profit for scenario i

$PEPI_i$ Percentage of joint expected profit increase comparing EP_i with EP_1

MP Marginal profit for each sold unit

ML Marginal lose for each unsold unit

α Negotiation factor

b down-script of the buyer

v down-script of the vendor

c down-script of collaboration

The model is shown in Figure 1.

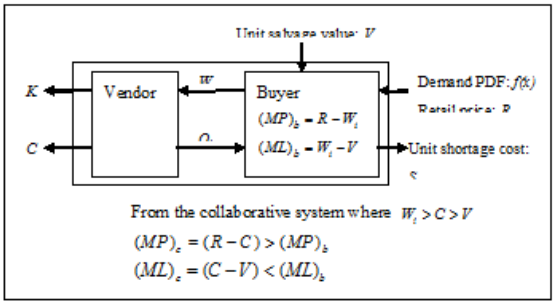

Figure 1. The collaborative vendor-buyer system

Three scenarios are considered.

Scenario 1: Without considering the buyer-vendor collaboration and price reduction

From the viewpoint of the buyer, the buyer's marginal profit and lose are R-W_1 and W_1-V respectively. The buyer's expected profit is

$$EP_1 = (R-W_1)[Q_1 - \int_0^{Q_1}(Q_1-x)f(x)dx] - (W_1-V)\int_0^{Q_1}(Q_1-x)f(x)dx - S\int_{Q_1}^{\infty}(x-Q_1)f(x)dx \quad (1)$$

The first term in (1) is the sales gross profit, the second term is the unsold loses, and the last term is the shortage loses. Taking the first derivative of (1) with respect to Q_1 and equating it to zero, one can derive the buyer's optimal purchase quantity

$$Q_1^* = F^{-1}(\frac{R-W_1+S}{R-V+S}) \quad (2)$$

where F^{-1} is the reverse function of $F(x)$ which is the cumulative distribution function of $f(x)$. After Q_1 is decided by the buyer, the vendor's profit is

$$EP_{v1} = (W_1 - C)Q_1^* - K \quad (3)$$

The joint expected profit is the sum of (1) and (3).

$$EP_1 = EP_{b1} + EP_{v1} \quad (4)$$

Substituting (2) into (1), one can derive EP_1. For scenario 1 without considering collaboration, the buyer and the vendor makes strategic decision independently.

Scenario 2: Considering the buyer-vendor collaboration without price reduction

The wholesale price is assumed as the same as that in scenario 1. From the viewpoint of the whole vendor-buyer system, the whole system's marginal profit and lose are R-C and C-V respectively. The joint expected profit is

$$EP_2 = (R-C)[Q_2 - \int_0^{Q_2}(Q_2-x)f(x)dx] - (C-V)\int_0^{Q_2}(Q_2-x)f(x)dx - S\int_{Q_2}^{\infty}(x-Q_2)f(x)dx - K \quad (5)$$

Taking the first derivative of (5) with respect to Q_2 and equating it to zero, one can derive the optimal joint purchase quantity

$$Q_2^* = F^{-1}(\frac{R-C+S}{R-V+S}) \quad (6)$$

The vendor's and the buyer's profits are

$$EP_{v2} = (W_2 - C)Q_2^* - K \quad (7)$$

and

$$EP_{b2} = EP_2 - EP_{v2} \quad (8)$$

respectively. Substituting (6) into (5), one can derive EP_2. For scenario 2, the buyer-vendor collaboration is considered. The joint expected profit is optimized jointly rather than independently as in scenario 1.

Scenario 3: Considering the collaboration and price reduction simultaneously

Since it usually benefits the vendor more than the buyer when both the buyer and the vendor are collaborated in scenario 2, a quantity discount pricing strategy is necessary to entice the buyer to accept the collaboration. In this scenario, the wholesale price is reduced to entice the buyer to join the collaboration. The joint expected profit is

$$EP_3 = (R-C)[Q_3 - \int_0^{Q_3}(Q_3-x)f(x)x] - (C-V)\int_0^{Q_3}(Q_3-x)f(x)dx - S\int_{Q_3}^{\infty}(x-Q_3)f(x)dx - K \quad (9)$$

The optimal value of Q_3 is the same as Q_2. Since (9) is not a function of wholesale price, the optimal expected profit EP_3 is the same as EP_2. The buyer's and the vendor's extra benefits incurred from collaboration, Δ_b and Δ_v, are defined as

$$\Delta_b = EP_{b3} - EP_{b1} \quad (10)$$

and

$$\Delta_v = EP_{v3} - EP_{v1} \quad (11)$$

respectively.

Incorporating the negotiation factor, the relationship between the buyer's and the vendor's extra benefit is defined as

$\Delta_v = \alpha\Delta_b$, where α is the negotiation factor (12)

When $\alpha = 0$, it means all extra benefit sharing are accrued to the buyer; when $\alpha = 1$, it implies that the extra benefit sharing is equally distributed. A large α means that benefit is accrued mainly the vendor. The optimization problem is stated as:

$$\text{Maximize } EP_3 \quad (13)$$
$$\text{Subject to } \Delta_v = \alpha\Delta_b$$

From (12), one can derive W_3 with known $Q_3^* = F^{-1}(\frac{R-C+S}{R-V+S})$. After substituting W_3 and Q_3 into the constraint of (13), one can derive W_3 and EP_3.

From (2) and (6), since $W_i > C > V$, one can prove the following two propositions.

PROPOSITION 1

Collaborative order quantity is greater than non-collaborative order quantity.

Proof of PROPOSITION 1

From (6) and (2), $Q_2^* > Q_1^*$ because $W_1 > C$.

PROPOSITION 2

Collaborative joint expected profit is greater than non-collaborative joint expected profit.

Proof of PROPOSITION 2

Use the following transformations:

$$\int_0^{Q_i} f(x)dx = F(Q_i) \quad (14)$$

$$\int_{Q_i}^{\infty} xf(x)dx = \mu - \int_0^{Q_i} xf(x)dx = \mu - Q_iF(Q_i) + \int_0^{Q_i} F(x)dx \quad (15)$$

and

$$\int_0^{Q_i} xf(x)dx = Q_iF(Q_i) - \int_0^{Q_i} F(x)dx \quad (16)$$

where μ is the expected value of demand.

One can derive the difference between EP_2 and EP_1 from (5) and (4) as:

$$EP_2 - EP_1 = (Q_2 - Q_1)(R - C + S) - (R - V + S)\int_{Q_1}^{Q_2} F(x)dx \quad (17)$$

The first derivative of (17) with respect to Q_2 is zero when $Q_2 = F^{-1}(\frac{R-C+S)}{R-V-S}$ from (6). It is expressed as:

$$\frac{d(EP_2 - EP_1)}{dQ_2} = (R - C + S) - (R - V + S)F(Q_2) = 0 \quad (18)$$

The second derivative of (17) with respect to Q_2 is negative. It is expressed as:

$$\frac{d(EP_2 - EP_1)^2}{dQ_2^2} = -(R - V + S)f(Q_2) < 0 \quad (19)$$

Proposition 2 is proved because of the following reasons: (i) $Q_2 > Q_1$ from Proposition 1, (ii) $EP_2 - EP_1 = 0$ if $Q_2 = Q_1$, (iii) The first derivative of (17) with respect to Q_2 is zero when $Q_2 = F^{-1}(\frac{R-C+S)}{R-V-S}$ and (iv) The second derivative of (17) with respect to Q_2 is negative. The relation between (EP_2-EP_1) and Q_2 is illustrated in Figure 2.

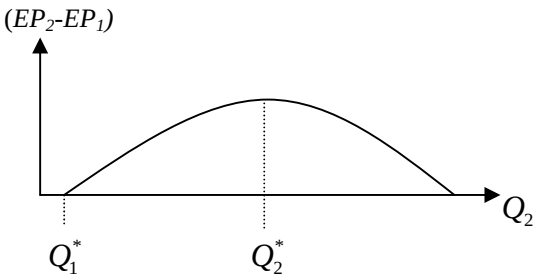

Figure 2. Relation between (EP_2-EP_1) and Q_2

The percentage of expected profit increase ($PEPI_i$) is defined as

$$PEPI_i = [(EP_i - EP_1)/EP_1]100\%, i = 2, 3 \quad (20)$$

PROPOSITION 3

The value of *PEPI* increases with respect to the vendor's fixed cost.

Proof of PROPOSITION 3

EP_1 and EP_2 can be simplified as follow:

$$EP_i = -(R - V + S)\int_0^{Q_i^*} F(x)dx + Q_i^*(R - C + S) - K - S\mu \quad (21)$$

,i=1, 2

Taking the first derivative of $[(EP_2-EP_1)/EP_1]$ with respect to the vendor's fixed cost, one can derive

$$\frac{d}{dK}\left(\frac{EP_2}{EP_1}\right) = \frac{1}{(EP_1)^2}(-EP_1 + EP_2) > 0 \qquad (22)$$

Since (22) is positive, PROPOSITION 3 is proved.

PROPOSITION 4

The value of *PEPI* increases when the demand's mean value decreases.

PROPOSITION 5

When $(q_2 - q_1)(R-C+S) - (R-V+S)\int_{q_1}^{q_2} F_0(y)dy > 0$ and $(R-C)\mu - K > 0$, the value of *PEPI* increases when the demand's standard deviation increases. The notation of q_1, q_2 and $F_0(y)$ are defined in the following proof.

Proof of PROPOSITION 4 and 5

X is a random variable of demand with mean value μ and standard deviation σ. *f(x)* and *F(x)* are a probability density function and a cumulative distribution function of random variable X respectively. Let Y locate a point measured from the mean μ of a random variable X with the distance expressed in units of standard deviation of the original random variable X (i.e., $Y = \frac{X-\mu}{\sigma}$). The probability density function and cumulative distribution function of Y are denoted as $f_0(y)$ and $F_0(y)$ respectively, where $f_0(y)$ and $F_0(y)$ are defined in the range from lower bound a and $F_0(y) = \int_a^y f_0(y)dy$. Q_1^* and Q_2^* can be expressed as follows:

$$Q_1^* = \mu + \sigma F_0^{-1}\left(\frac{R-W_1+S}{R-V+S}\right) \equiv \mu + \sigma q_1 \qquad (23)$$

and

$$Q_2^* = \mu + \sigma F_0^{-1}\left(\frac{R-C+S}{R-V+S}\right) \equiv \mu + \sigma q_2 \qquad (24)$$

respectively. In (23) and (24), q_1 and q_2 are defined as $q_1 = F_0^{-1}\left(\frac{R-W_1+S}{R-V+S}\right)$ and $q_2 = F_0^{-1}\left(\frac{R-C+S}{R-V+S}\right)$ respectively.

EP_i can be expressed as

$$\begin{aligned} EP_i &= -(R-V+S)\int_{\mu+\sigma a}^{Q_i^*} F(x)dx + Q_i(R-C+S) - K - S\mu \\ &= -(R-V+S)\sigma\int_a^{q_i} F_0(y)dy + (\mu+\sigma q_i)(R-C+S) - K - S\mu \\ &= \sigma[-(R-V+S)\int_a^{q_i} F_0(y)dy + q_i(R-C+S)] + [(R-C)\mu - K] \\ &\equiv \sigma A_i + B,\ i = 1, 2 \end{aligned}$$

where A_i and B are defined as

$$A_i = -(R-V+S)\int_a^{q_i} F_0(y)dy + q_i(R-C+S)$$
$$B = (R-C)\mu - K \qquad (25)$$

Since $\frac{dEP_i}{d\mu} = \frac{dQ_i^*}{d\mu}(R-C+S) - S = R-C$ from (23) and (24), one can derive

$$\begin{aligned} \frac{d}{d\mu}\left(\frac{EP_2 - EP_1}{EP_1}\right) &= \frac{1}{(EP_1)^2}\left[EP_1\frac{dEP_2}{d\mu} - EP_2\frac{dEP_1}{d\mu}\right] \\ &= \frac{1}{(EP_1)^2}(EP_1 - EP_2)(R-C) < 0 \end{aligned} \qquad (26)$$

Since $EP_1 < EP_2$ and $R > C$, PROPOSITION 4 is proved.

From (23), (24) and (25), the first derivatives of EP_i and $(EP_2-EP_1)/EP_1$ with respect to σ are

$$\frac{dEP_i}{d\sigma} = -(R-V+S)\int_a^{q_i} F_0(y)dy + q_i(R-C+S) \qquad (27)$$

and

$$\begin{aligned} &\frac{d}{d\sigma}\left(\frac{EP_2 - EP_1}{EP_1}\right) \\ &= \frac{1}{(EP_1)^2}[(EP_1)A_2 - (EP_2)A_1] \\ &= \frac{1}{(EP_1)^2}(A_2 - A_1)B \\ &= \frac{1}{(EP_1)^2}[(q_2-q_1)(R-C+S) - (R-V+S)\int_{q_1}^{q_2} F_0(y)dy][(R-C)\mu - K] \end{aligned} \qquad (28)$$

respectively.

When $(q_2 - q_1)(R-C+S) - (R-V+S)\int_{q_1}^{q_2} F_0(y)dy > 0$ and $(R-C)\mu - K > 0$, (28) is positive. PROPOSITION 5 is proved.

3. Numerical example and sensitivity analysis

The preceding theory can be illustrated by the following numerical example where the parameters are given as follows:

Probability density function of demand is uniform, $f(x) = U(m-r/2, m+r/2)$ with mean value m=150 and range r=100.Wholesale price paid by the buyer to the vendor, W_i =\$80 for scenario i=1, 2.

Retail price, R=\$100

Unit shortage cost, S=\$20 per unit shortage

Salvage value for each unsold unit, V=\$10.

Vendor's unit variable cost, C=\$30.

Vendor's fixed cost per setup, F=\$1,000.

Negotiation factor, α =0.5.

By applying the above theory, the results are given in Table 1-3. Table 1 illustrates the optimal solutions with various scenarios. For scenario 1 from the buyer's viewpoint, the optimal order quantity is 136 units. The sales, unsold and shortage are 130, 7, 20 units respectively. The sales gross profit, unsold loses and shortage loses are \$2,595, \$463 and \$405 respectively. The buyer's, the vendor's and the joint expected profits are \$1,727, \$5,828 and \$7,545 respectively.

For scenario 2 from the collaborative vendor-buyer viewpoint, the optimal order quantity is 182 units. The sales, unsold and shortage are 148, 33 and 2 units respectively. The sales gross profit, unsold and shortage loses are \$2,967, \$2,343 and \$33 units respectively. The joint expected profit becomes greater. The percentage of expected profit increase ($PEPI_2$) is 15.07%. While the buyer expected profit decreases. The buyer will resist joining in the collaborative system.

For scenario 3, the vendor may offer price discount to entice the buyer to collaborate. The order quantity is the same as that in scenario 2. When α =0.5, the wholesale price is \$69.6. The wholesale discount rate is 13%. The vendor's extra benefit is \$379, which is a half of the buyer's extra benefit \$758. EP_3 in scenario 3 is the same as EP_2 in scenario 2.

The demand's standard deviation is proportional to the range of uniform distribution (i.e., $\sigma = r/\sqrt{12}$). From Table 2, one can see that the value of $PEPI_2$ increases with respect to demand's standard deviation. From Table 3, the value of $PEPI_2$ increases when demand's mean value decreases. According to (28), since $(R-C)\mu - K = 9500 > 0$ and $(q_2 - q_1)(R-C+S) - (R-V+S)\int_{q_1}^{q_2} F_0(y)dy = 39.4 > 0$ when r=100 and μ =150, one can see that the value of $PEPI$ increases when the demand's mean value decreases or standard deviation increases.

4. Concluding remarks

An optimal replenishment and pricing policy is developed for uncertain demand. The numerical example demonstrates that the vendor-buyer collaboration results in an increase in the expected profit of about 15%. The negotiation factor is incorporated to balance the profit sharing between the vendor and the buyer. From the proposition, one can make the following conclusions: (i) the collaborative order quantity is larger than the non-collaborative order quantity (ii) the collaborative joint expected profit is greater than the non-collaborative joint expected profit (iii) the value of $PEPI$ increases with respect to the vendor's fixed cost and (iv) the advantage of considering collaboration is usually more significant when the demand's mean value decreases and/or the standard deviation increases.

Table 1. Solutions with various scenarios

Before and after collaboration / Terms	Before collaboration (I)	After collaboration without price discount (II)	After collaboration with price discount (III)	Diff. (II)-(I)	Diff. (III)-(I)
i	i=1	i=2	i=3		
Q_i	136	182	182	56	56
W_i	80	80	69.6	0	-10.4
Sales	130	148	148	18	18
Unsold	7	33	33	26	26
Shortage	20	2	2	-18	-18
Sales Gross Profit	9413	10384	11709	971	2296
Unsold Loses	463	669	1994	206	1531
Shortage Loses	405	33	33	-372	-372
EP_{bi}	1727	591	2485	-1136	758
EP_{si}	5818	8091	6197	2273	379
EP_i	7545	8682	8682	1137	1137
$PEPI_i$	------	0.1507	0.1507	0.1507	0.1507

Table 2. Sensitivity analysis when the standard deviation of demand is changed

r	Expected profit		$PEPI_2$
	Before collaboration (I)	After collaboration (II)	(II − I)/(I)
70	8132	8927	9.78%
80	7936	8845	11.45%
90	7741	8764	13.22%
{100}	7545	8682	15.07%
110	7350	8600	17.01%
120	7155	8518	19.05%
130	6959	8436	21.22%

{}: Basic value

Table 3. Sensitivity analysis when the mean of demand is changed

μ	Expected profit		$PEPI_2$
	Before collaboration (I)	After collaboration (II)	(II − I)/(I)
105	4395	5532	25.87%
120	5445	6582	20.88%
135	6495	7632	17.51%
{150}	7545	8682	15.07%
165	8595	9732	13.23%
180	9645	10782	11.79%
195	10695	11832	10.63%

References

Chakravarty, A.K. & Martin, G.E., (1988). "An optimal joint buyer-seller discount pricing model." *Computers and Operations Research, 15*, 271-281.

Emmons, H. & Gilbert, S.M., (1988). "The role of returns policies in pricing and inventory decisions for catalogue goods." *Management Science, 44*(2), 277-283.

Gallego, G. & van Ryzin, G., (1994). "Optimal dynamic pricing of inventories with stochastic demand over finite horizons." *Management Science, 40*(8), 999-1020.

Kim, K.H. & Hwang, H., (1988). "An incremental discount-pricing schedule with multiple customers and single price break." *European Journal of Operational Research, 35*, 71-79.

Lal, P. & Staelin, R., (1984). "An approach for developing an optimal discount pricing policy." *Management Science, 30*, 1524-39.

Lee, L.E. & Rosenblatt, M.J., (1986). "A generalized quantity discount-pricing model to increase supplier's profits." *Management Science, 32*, 1177-85.

Li, S.X. Hung, Z. & Ashley, A., (1996). "Inventory channel coordination and bargaining in a manufacturer-retailer system." *Annals of Operations Research, 68*, 47-60.

Monahan, J.P., (1984). "A quantity discount-pricing model to increase vendor profits." *Management Science, 30*, 720-726.

Shin, H. & Benton, W.C., (2007). "A quantity discount approach to supply chain coordination."*European Journal of Operational Research, 180*, 601-616.

Wee, H.M., (1998). "Optimal buyer-seller discount pricing and ordering policy for deterioratin items." *The Engineering Economist, 43*(2), 151-168.

Weng, Z.K. ,(1995). "Modeling quantity discount under general price-sensitive demand functions: optimal policies and relations." *European Journal of Operational Research, 86*, 300-314.

Weng, Z.K. & Wong, R.T., (1993). "General models for the supplier's all-unit quantity discount policy." *Navel Research Logistics, 40*, 971-991.